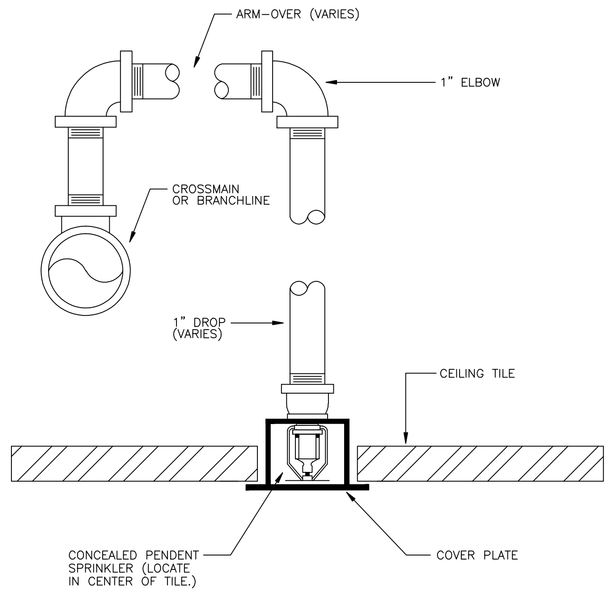

TYPICAL SPRINKLER DROP DETAIL
N.T.S.

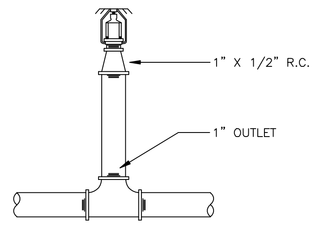

NOTE:
ALL BRANCH LINES SHALL BE SIZED FOR ADDITIONAL SPRINKLERS (2 SPRINKLERS PER 1" OUTLET).

TYPICAL SPRIG
N.T.S.

* WHERE PRESSURES EXCEED 300 PSI ON ANY FLOOR, PROVIDE A PRESSURE REDUCING VALVE.

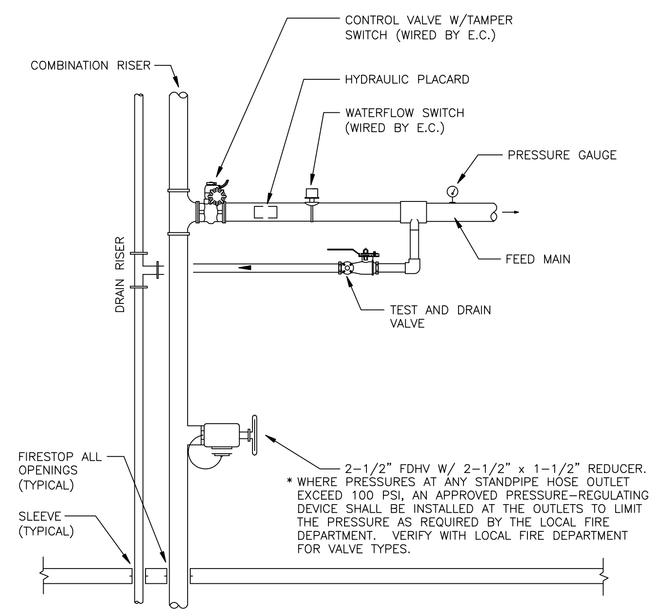

FLOOR CONTROL VALVE, TEST AND DRAIN ASSEMBLY
N.T.S.

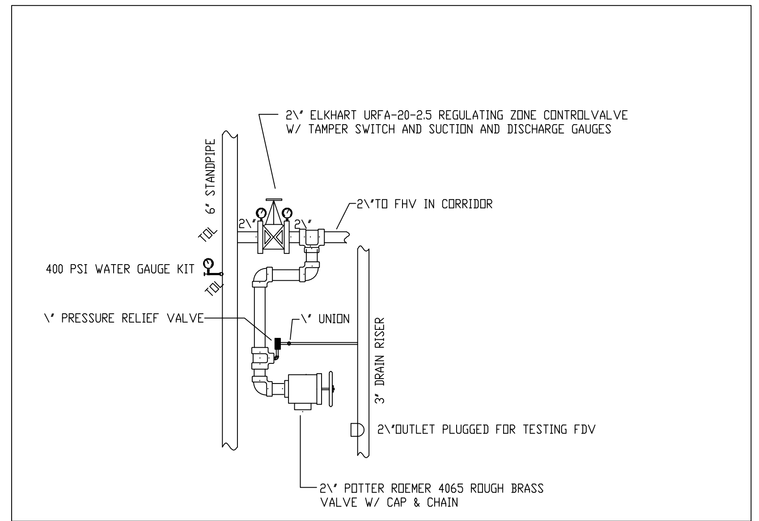

HOSE VALVE DETAIL SCALE: NONE

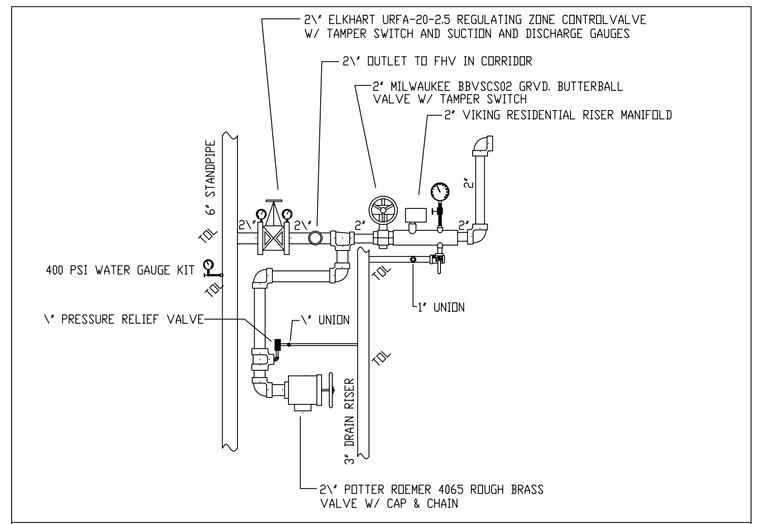

FLOOR CONTROL DETAIL SCALE: NONE

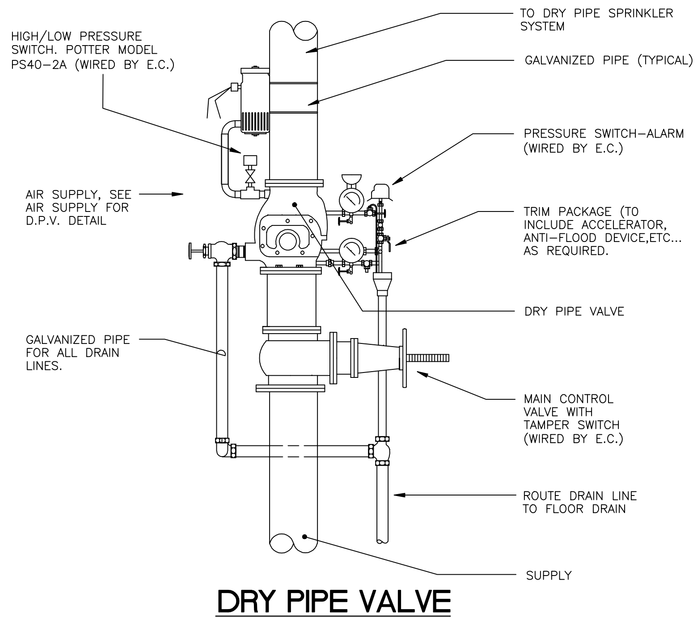

DRY PIPE VALVE
N.T.S.

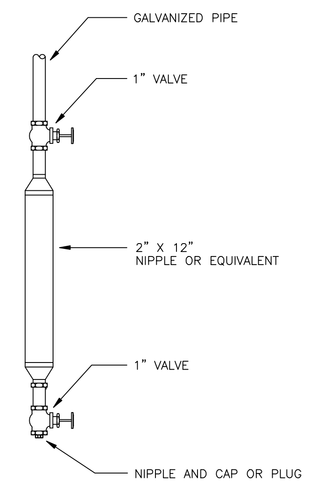

DRY SYSTEM AUXILIARY DRAIN
N.T.S.

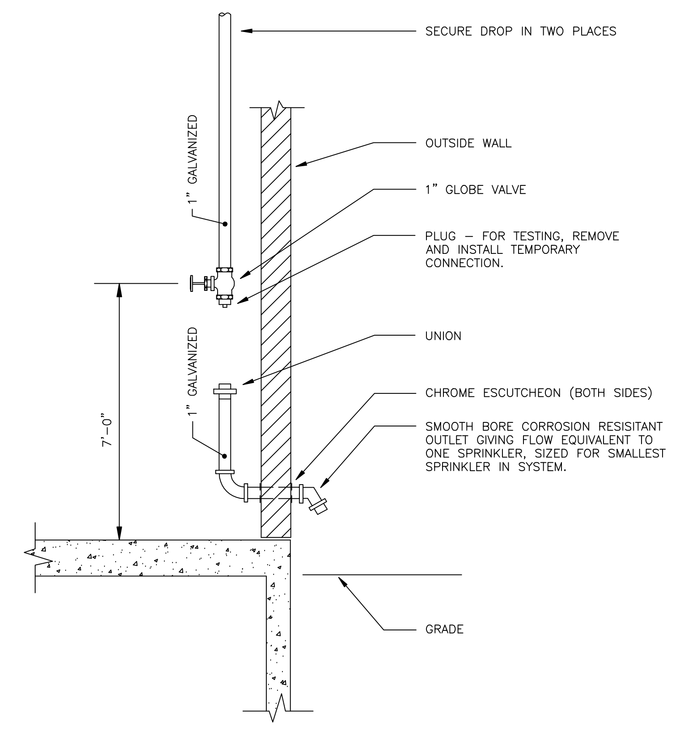

DRY SYSTEM EXTERIOR INSPECTORS' TEST CONNECTION
N.T.S.

DRY SYSTEM INSTALLATION NOTES:

DRY PIPE SYSTEM TO HAVE WATER AT THE INSPECTORS TEST 60 SECONDS AFTER THE DRY PIPE VALVE OPERATES.

DRY SYSTEM PIPING TO BE SLOPED PER NFPA 13:
MAINS: 1/4" PER 10'-0 SLOPE
LINES: 1/2" PER 10'-0 SLOPE

ABBREVIATIONS	

MATERIALS		
SIZE	LOCATION	TYPE

DESIGN CRITERIA			
SYSTEM #			
HAZARD			
SPACING			
K FACTOR			
INSIDE HOSE			
OUTSIDE HOSE			
RACK GPM			

HYDRAULICALLY DESIGNED SYSTEM			
LOCATION			
NO. OF SPRINKLERS			
DENSITY			
DESIGN AREA			
GPM DISCHARGE			
RESIDUAL PSI AT BASE OF RISER			

SYMBOL	QUAN.	MAKE	MODEL	SIZE	K=	TEMP.	TYPE	FINISH	ESCUTCHEON

DRAWING STATUS		
DATE	TYPE	REVIEWED BY
	SUBMITTAL DRAWING	
	FABRICATION DRAWING	
	INSTALLATION DRAWING	
	AS-BUILT DRAWING	

#	DATE	REVISION DESCRIPTION	BY

ABL FIRE PROTECTION, LLC
300 HOKE STREET
RALEIGH, NC 27601
919-835-2225
Fax 919-835-2210

PROJECT
SOLEIL CENTER
4501 CREEDMOOR
Raleigh, North Carolina
SHOP DRAWING - DETAILS

DRAWN BY:	DATE: 12-3-07
SPRKS. ON JOB:	SCALE: 1/8" = 1'-0"
APPROVALS:	
CONTRACT #:	SHEET #: FP- 3